ELECTROSTATIC SENSITIVE DEVICE
OBSERVE HANDLING PRECAUTIONS

MITSUBISHI RF MOSFET MODULE

RA30H4047M

RoHS Compliance , 400-470MHz 30W 12.5V, 3 Stage Amp. For MOBILE RADIO

DESCRIPTION

The RA30H4047M is a 30-watt RF MOSFET Amplifier Module for 12.5-volt mobile radios that operate in the 400- to 470-MHz range.

The battery can be connected directly to the drain of the enhancement-mode MOSFET transistors. Without the gate voltage (V_{GG}=0V), only a small leakage current flows into the drain and the RF input signal attenuates up to 60 dB. The output power and drain current increase as the gate voltage increases. With a gate voltage around 4V (minimum), output power and drain current increases substantially. The nominal output power becomes available at 4.5V (typical) and 5V (maximum). At V_{GG}=5V, the typical gate current is 1 mA.
This module is designed for non-linear FM modulation, but may also be used for linear modulation by setting the drain quiescent current with the gate voltage and controlling the output power with the input power.

BLOCK DIAGRAM

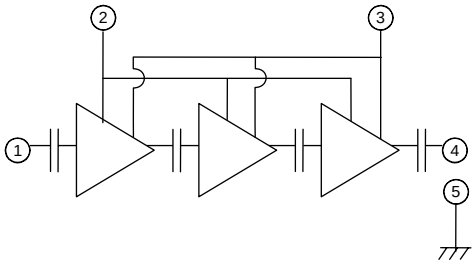

1. RF Input (P_{in})
2. Gate Voltage (V_{GG}), Power Control
3. Drain Voltage (V_{DD}), Battery
4. RF Output (P_{out})
5. RF Ground (Case)

PACKAGE CODE: H2S

FEATURES

- Enhancement- Mode MOSFET Transistors (I_{DD}≅0 @ V_{DD}=12.5V, V_{GG}=0V)
- P_{out}>30W, η_T>40% @ V_{DD}=12.5V, V_{GG}=5V, P_{in}=50mW
- Broadband Frequency Range: 400-470MHz
- Low-Power Control Current I_{GG}=1mA (typ) at V_{GG}=5V
- Module Size: 66 x 21 x 9.88 mm
- Linear operation is possible by setting the quiescent drain current with the gate voltage and controlling the output power with the input power

RoHS COMPLIANCE

- RA30H4047M-101 is a RoHS compliant products.
- RoHS compliance is indicate by the letter “G” after the Lot Marking.
- This product include the lead in the Glass of electronic parts and the lead in electronic Ceramic parts.

  How ever ,it applicable to the following exceptions of RoHS Directions.

  1. Lead in the Glass of a cathode-ray tube, electronic parts, and fluorescent tubes.
  2. Lead in electronic Ceramic parts.

ORDERING INFORMATION:

ORDER NUMBER	SUPPLY FORM
RA30H4047M-101	Antistatic tray, 10 modules/tray

MAXIMUM RATINGS (T_{case}=+25°C, unless otherwise specified)

SYMBOL	PARAMETER	CONDITIONS	RATING	UNIT
V_{DD}	Drain Voltage	V_{GG}<5V	17	V
V_{GG}	Gate Voltage	V_{DD}<12.5V, P_{in}=0mW	6	V
P_{in}	Input Power	f=400-470MHz, Z_G=Z_L=50Ω	100	mW
P_{out}	Output Power		45	W
$T_{case(OP)}$	Operation Case Temperature Range		-30 to +110	°C
T_{stg}	Storage Temperature Range		-40 to +110	°C

The above parameters are independently guaranteed.

ELECTRICAL CHARACTERISTICS (T_{case}=+25°C, Z_G=Z_L=50Ω, unless otherwise specified)

SYMBOL	PARAMETER	CONDITIONS	MIN	TYP	MAX	UNIT
f	Frequency Range		400	-	470	MHz
P_{out}	Output Power	V_{DD}=12.5V, V_{GG}=5V, P_{in}=50mW	30	-	-	W
η_T	Total Efficiency		40	-	-	%
$2f_o$	2nd Harmonic		-	-	-25	dBc
ρ_{in}	Input VSWR		-	-	3:1	—
I_{GG}	Gate Current		-	1	-	mA
—	Stability	V_{DD}=10.0-15.2V, P_{in}=25-70mW, P_{out}<40W (V_{GG} control), Load VSWR=3:1	No parasitic oscillation			—
—	Load VSWR Tolerance	V_{DD}=15.2V, P_{in}=50mW, P_{out}=30W (V_{GG} control), Load VSWR=20:1	No degradation or destroy			—

All parameters, conditions, ratings, and limits are subject to change without notice.

TYPICAL PERFORMANCE (T_{case}=+25°C, Z_G=Z_L=50Ω, unless otherwise specified)

OUTPUT POWER, TOTAL EFFICIENCY, and INPUT VSWR versus FREQUENCY

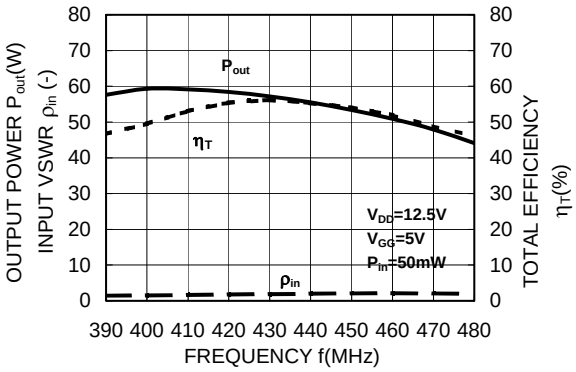

2nd, 3rd HARMONICS versus FREQUENCY

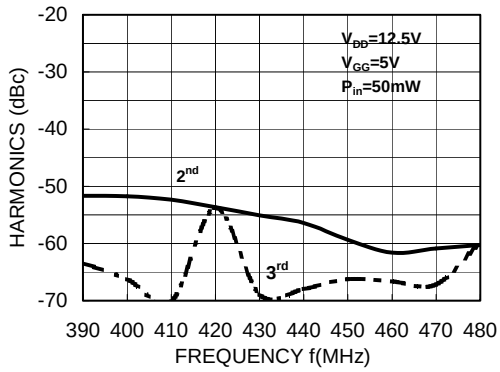

OUTPUT POWER, POWER GAIN and DRAIN CURRENT versus INPUT POWER

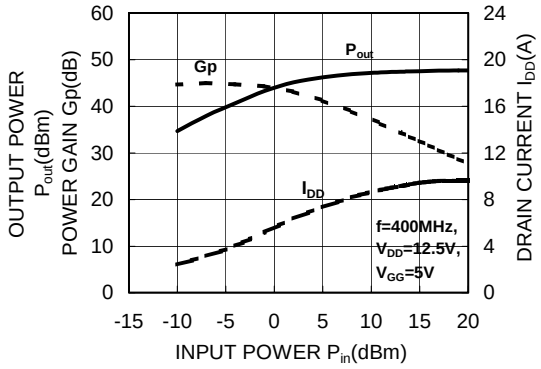

OUTPUT POWER, POWER GAIN and DRAIN CURRENT versus INPUT POWER

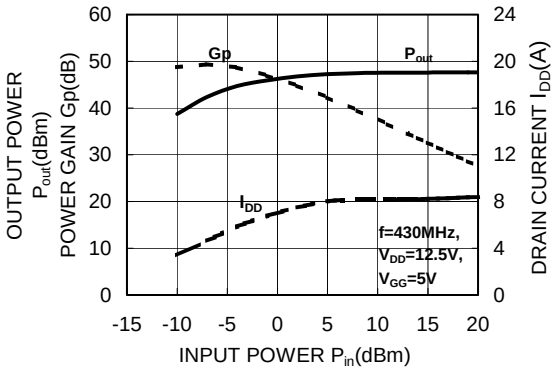

OUTPUT POWER, POWER GAIN and DRAIN CURRENT versus INPUT POWER

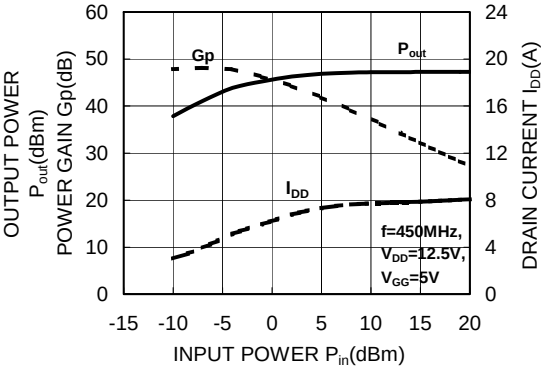

OUTPUT POWER, POWER GAIN and DRAIN CURRENT versus INPUT POWER

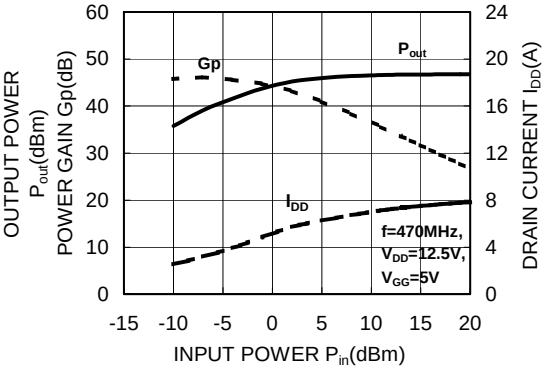

OUTPUT POWER and DRAIN CURRENT versus DRAIN VOLTAGE

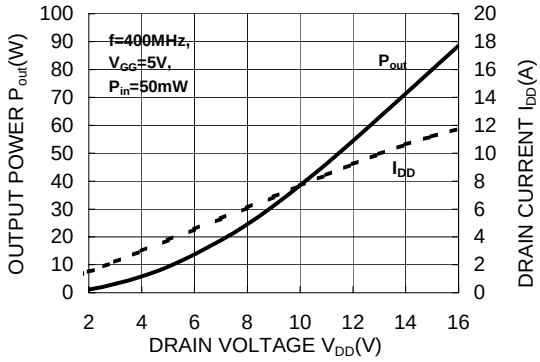

OUTPUT POWER and DRAIN CURRENT versus DRAIN VOLTAGE

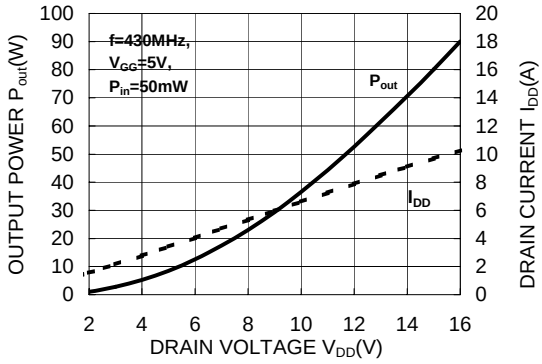

TYPICAL PERFORMANCE (T_{case}=+25°C, Z_G=Z_L=50Ω, unless otherwise specified)

OUTPUT POWER and DRAIN CURRENT versus DRAIN VOLTAGE

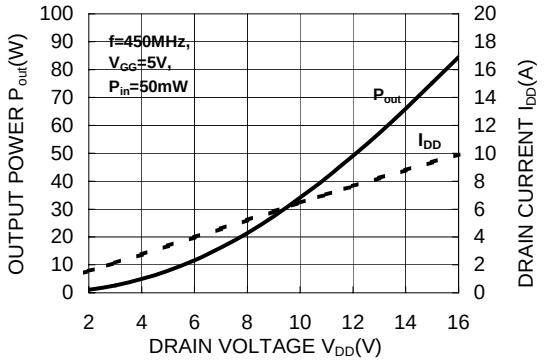

OUTPUT POWER and DRAIN CURRENT versus DRAIN VOLTAGE

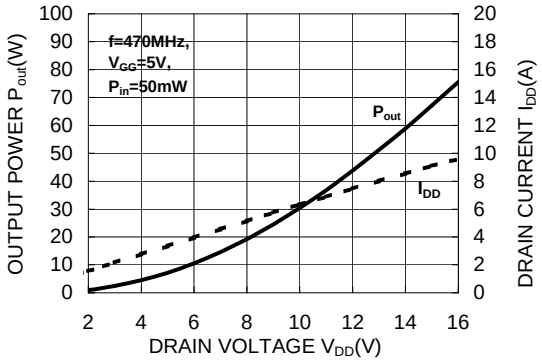

OUTPUT POWER and DRAIN CURRENT versus GATE VOLTAGE

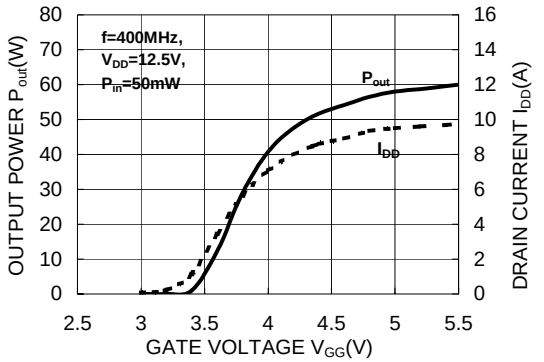

OUTPUT POWER and DRAIN CURRENT versus GATE VOLTAGE

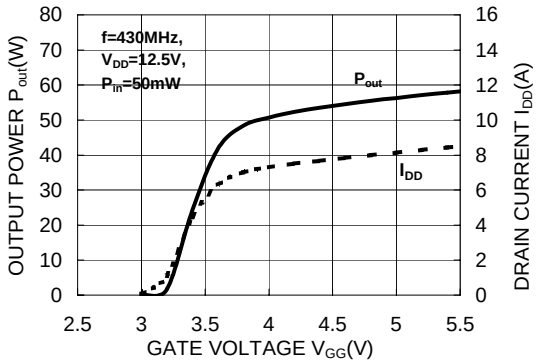

OUTPUT POWER and DRAIN CURRENT versus GATE VOLTAGE

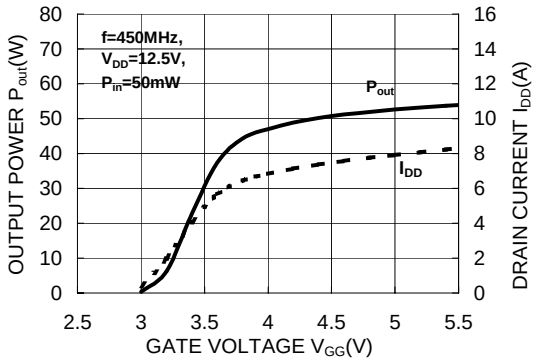

OUTPUT POWER and DRAIN CURRENT versus GATE VOLTAGE

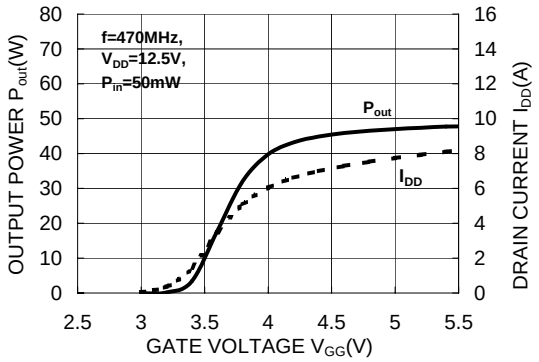

OUTLINE DRAWING (mm)

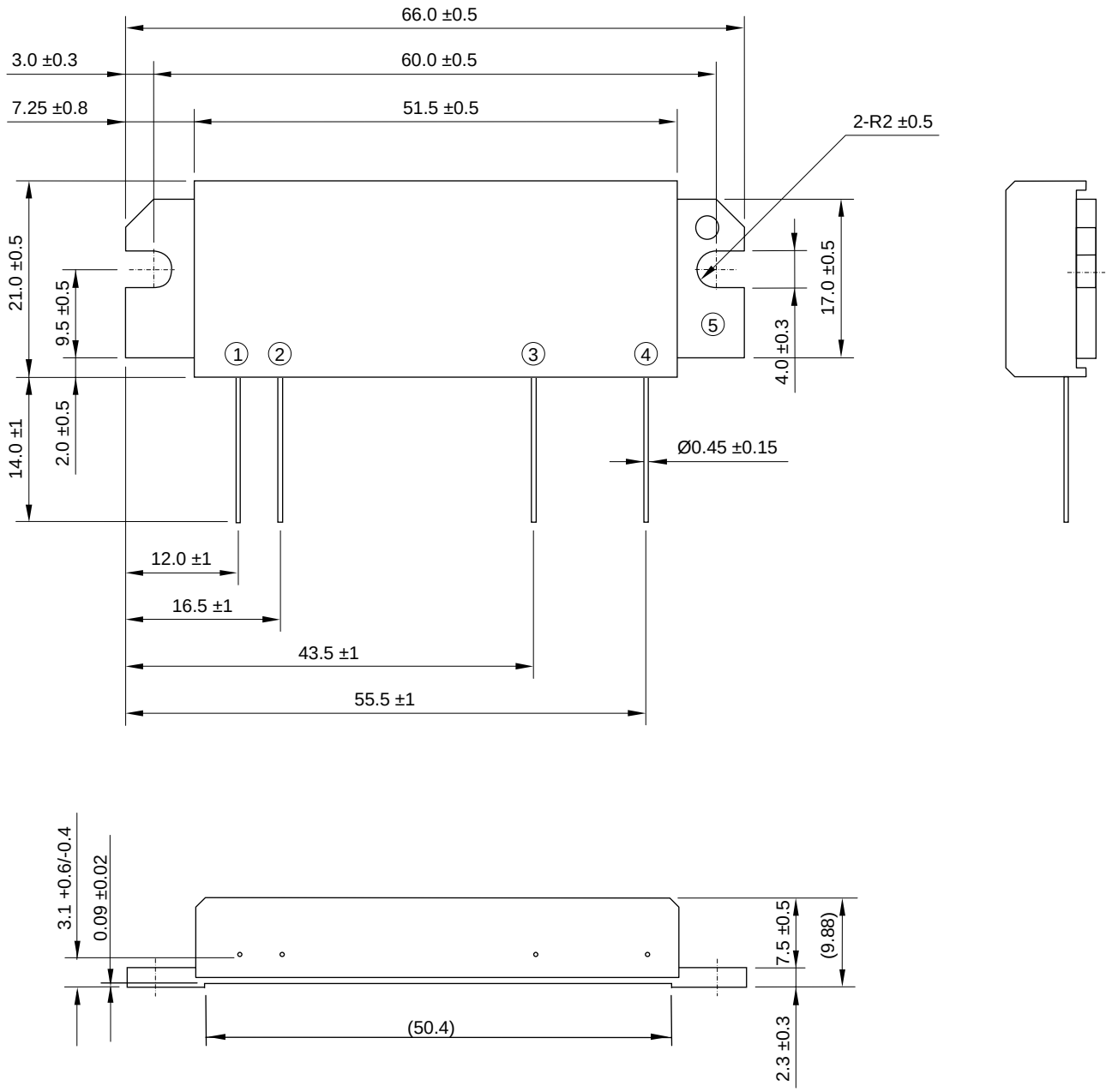

① RF Input (P_{in})
② Gate Voltage (V_{GG})
③ Drain Voltage (V_{DD})
④ RF Output (P_{out})
⑤ RF Ground (Case)

TEST BLOCK DIAGRAM

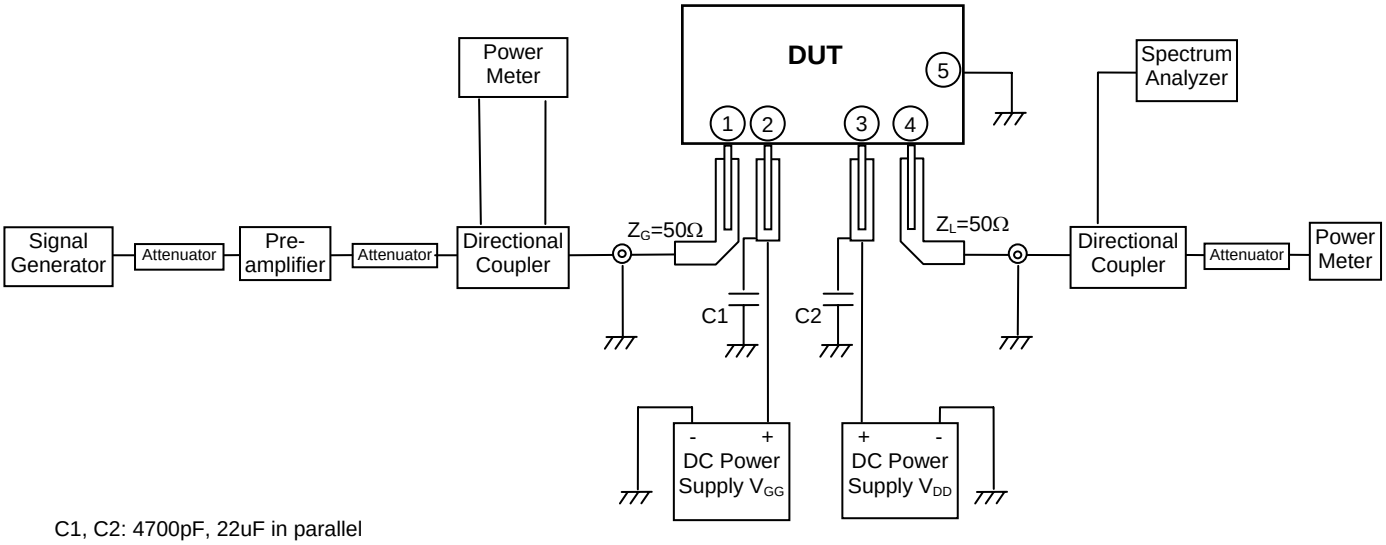

C1, C2: 4700pF, 22uF in parallel

① RF Input (P_{in})
② Gate Voltage (V_{GG})
③ Drain Voltage (V_{DD})
④ RF Output (P_{out})
⑤ RF Ground (Case)

EQUIVALENT CIRCUIT

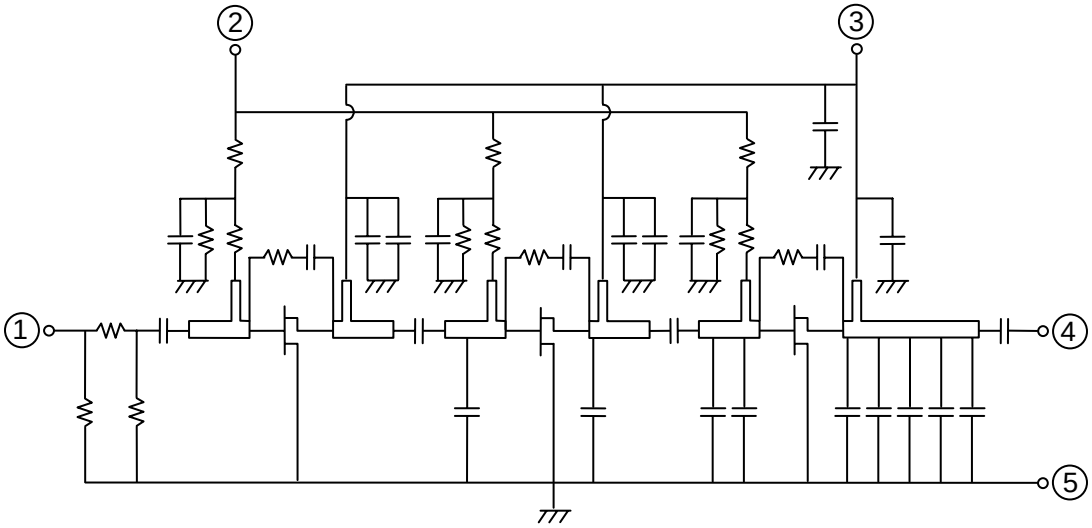

RECOMMENDATIONS and APPLICATION INFORMATION:

Construction:

This module consists of an alumina substrate soldered onto a copper flange. For mechanical protection, a plastic cap is attached with silicone. The MOSFET transistor chips are die bonded onto metal, wire bonded to the substrate, and coated with resin. Lines on the substrate (eventually inductors), chip capacitors, and resistors form the bias and matching circuits. Wire leads soldered onto the alumina substrate provide the DC and RF connection.
Following conditions must be avoided:
a) Bending forces on the alumina substrate (for example, by driving screws or from fast thermal changes)
b) Mechanical stress on the wire leads (for example, by first soldering then driving screws or by thermal expansion)
c) Defluxing solvents reacting with the resin coating on the MOSFET chips (for example, Trichloroethylene)
d) Frequent on/off switching that causes thermal expansion of the resin
e) ESD, surge, overvoltage in combination with load VSWR, and oscillation

ESD:

This MOSFET module is sensitive to ESD voltages down to 1000V. Appropriate ESD precautions are required.

Mounting:

Heat sink flatness must be less than 50 µm (a heat sink that is not flat or particles between module and heat sink may cause the ceramic substrate in the module to crack by bending forces, either immediately when driving screws or later when thermal expansion forces are added).
A thermal compound between module and heat sink is recommended for low thermal contact resistance and to reduce the bending stress on the ceramic substrate caused by the temperature difference to the heat sink.
The module must first be screwed to the heat sink, then the leads can be soldered to the printed circuit board.
M3 screws are recommended with a tightening torque of 4.0 to 6.0 kgf-cm.

Soldering and Defluxing:

This module is designed for manual soldering.
The leads must be soldered after the module is screwed onto the heat sink.
The temperature of the lead (terminal) soldering should be lower than 350°C and shorter than 3 second.
Ethyl Alcohol is recommend for removing flux. Trichloroethylene solvents must not be used (they may cause bubbles in the coating of the transistor chips which can lift off the bond wires).

Thermal Design of the Heat Sink:

At P_{out}=30W, V_{DD}=12.5V and P_{in}=50mW each stage transistor operating conditions are:

Stage	P_{in} (W)	P_{out} (W)	$R_{th(ch-case)}$ (°C/W)	I_{DD} @ η_T=40% (A)	V_{DD} (V)
1st	0.05	1.5	29.0	0.18	12.5
2nd	1.5	9.0	2.4	1.60	
3rd	9.0	30.0	1.2	4.20	

The channel temperatures of each stage transistor $T_{ch} = T_{case} + (V_{DD} \times I_{DD} - P_{out} + P_{in}) \times R_{th(ch-case)}$ are:

$T_{ch1} = T_{case} + (12.5V \times 0.18A - 1.5W + 0.05W) \times 29.0°C/W = T_{case} + 23.2\ °C$
$T_{ch2} = T_{case} + (12.5V \times 1.60A - 9.0W + 1.5W) \times 2.4°C/W = T_{case} + 30.0\ °C$
$T_{ch3} = T_{case} + (12.5V \times 4.20A - 30.0W + 9.0W) \times 1.2°C/W = T_{case} + 37.8\ °C$

For long-term reliability, it is best to keep the module case temperature (T_{case}) below 90°C. For an ambient temperature T_{air}=60°C and P_{out}=30W, the required thermal resistance $R_{th\ (case-air)} = (T_{case} - T_{air}) / ((P_{out} / \eta_T) - P_{out} + P_{in})$ of the heat sink, including the contact resistance, is:
$R_{th(case-air)} = (90°C - 60°C) / (30W/40\% - 30W + 0.05W) = 0.67\ °C/W$

When mounting the module with the thermal resistance of 0.67 °C/W, the channel temperature of each stage transistor is:

$T_{ch1} = T_{air} + 53.2\ °C$
$T_{ch2} = T_{air} + 60.0\ °C$
$T_{ch3} = T_{air} + 67.8\ °C$

The 175°C maximum rating for the channel temperature ensures application under derated conditions.

Output Power Control:

Depending on linearity, the following two methods are recommended to control the output power:

a) Non-linear FM modulation:

By the gate voltage (V_{GG}).

When the gate voltage is close to zero, the RF input signal is attenuated up to 60 dB and only a small leakage current flows from the battery into the drain.

Around V_{GG}=4V, the output power and drain current increases substantially.

Around V_{GG}=4.5V (typical) to V_{GG}=5V (maximum), the nominal output power becomes available.

b) Linear AM modulation:

By RF input power P_{in}. The gate voltage is used to set the drain's quiescent current for the required linearity.

Oscillation:

To test RF characteristics, this module is put on a fixture with two bias decoupling capacitors each on gate and drain, a 4.700 pF chip capacitor, located close to the module, and a 22 µF (or more) electrolytic capacitor.

When an amplifier circuit around this module shows oscillation, the following may be checked:

a) Do the bias decoupling capacitors have a low inductance pass to the case of the module?

b) Is the load impedance Z_L=50Ω?

c) Is the source impedance Z_G=50Ω?

ATTENTION:

1.High Temperature; This product might have a heat generation while operation,Please take notice that have a possibility to receive a burn to touch the operating product directly or touch the product until cold after switch off. At the near the product,do not place the combustible material that have possibilities to arise the fire.

2. Generation of High Frequency Power; This product generate a high frequency power. Please take notice that do not leakage the unnecessary electric wave and use this products without cause damage for human and property per normal operation.

3. Before use; Before use the product,Please design the equipment in consideration of the risk for human and electric wave obstacle for equipment.

PRECAUTION FOR THE USE OF MITSUBISHI SILICON RF POWER AMPLIFIER DEVICES:

1.The specifications of mention are not guarantee values in this data sheet. Please confirm additional details regarding operation of these products from the formal specification sheet. For copies of the formal specification sheets, please contact one of our sales offices.

2.RA series products (RF power amplifier modules) are designed for consumer mobile communication terminals and were not specifically designed for use in other applications. In particular, while these products are highly reliable for their designed purpose, they are not manufactured under a quality assurance testing protocol that is sufficient to guarantee the level of reliability typically deemed necessary for critical communications elements. Examples of critical communications elements would include transmitters for base station applications and fixed station applications that operate with long term continuous transmission and a higher on-off frequency during transmitting, especially for systems that may have a high impact to society.

3.RA series products use MOSFET semiconductor technology. They are sensitive to ESD voltage therefore appropriate ESD precautions are required.

4.In order to maximize reliability of the equipment, it is better to keep the devices temperature low. It is recommended to utilize a sufficient sized heat-sink in conjunction with other cooling methods as needed (fan, etc.) to keep the case temperature for RA series products lower than 60deg/C under standard conditions, and less than 90deg/C under extreme conditions.

5.RA series products are designed to operate into a nominal load impedance of 50 ohms. Under the condition of operating into a severe high load VSWR approaching an open or short, an over load condition could occur. In the worst case there is risk for burn out of the transistors and burning of other parts including the substrate in the module.

6.The formal specification includes a guarantee against parasitic oscillation under a specified maximum load mismatch condition. The inspection for parasitic oscillation is performed on a sample basis on our manufacturing line. It is recommended that verification of no parasitic oscillation be performed at the completed equipment level also.

7.For specific precautions regarding assembly of these products into the equipment, please refer to the supplementary items in the specification sheet.

8.Warranty for the product is void if the products protective cap (lid) is removed or if the product is modified in any way from it's original form.

9.For additional "Safety first" in your circuit design and notes regarding the materials, please refer the last page of this data sheet.

10. Please refer to the additional precautions in the formal specification sheet.

Keep safety first in your circuit designs !

Mitsubishi Electric Corporation puts the maximum effort into making semiconductor products better and more reliable, but there is always the possibility that trouble may occur with them. Trouble with semiconductors may lead to personal injury, fire or property damage. Remember to give due consideration to safety when making your circuit designs, with appropriate measures such as (i) placement of substitutive, auxiliary circuits, (ii) use of non-flammable material or (iii) prevention against any malfunction or mishap.

Notes regarding these materials

- These materials are intended as a reference to assist our customers in the selection of the Mitsubishi semiconductor product best suited to the customer's application; they do not convey any license under any intellectual property rights, or any other rights, belonging to Mitsubishi Electric Corporation or a third party.
- Mitsubishi Electric Corporation assumes no responsibility for any damage, or infringement of any third-party's rights, originating in the use of any product data, diagrams, charts, programs, algorithms, or circuit application examples contained in these materials.
- All information contained in these materials, including product data, diagrams, charts, programs and algorithms represents information on products at the time of publication of these materials, and are subject to change by Mitsubishi Electric Corporation without notice due to product improvements or other reasons. It is therefore recommended that customers contact Mitsubishi Electric Corporation or an authorized Mitsubishi Semiconductor product distributor for the latest product information before purchasing a product listed herein. The information described here may contain technical inaccuracies or typographical errors. Mitsubishi Electric Corporation assumes no responsibility for any damage, liability, or other loss rising from these inaccuracies or errors. Please also pay attention to information published by Mitsubishi Electric Corporation by various means, including the Mitsubishi Semiconductor home page (http://www.mitsubishichips.com).
- When using any or all of the information contained in these materials, including product data, diagrams, charts, programs, and algorithms, please be sure to evaluate all information as a total system before making a final decision on the applicability of the information and products. Mitsubishi Electric Corporation assumes no responsibility for any damage, liability or other loss resulting from the information contained herein.
- Mitsubishi Electric Corporation semiconductors are not designed or manufactured for use in a device or system that is used under circumstances in which human life is potentially at stake. Please contact Mitsubishi Electric Corporation or an authorized Mitsubishi Semiconductor product distributor when considering the use of a product contained herein for any specific purposes, such as apparatus or systems for transportation, vehicular, medical, aerospace, nuclear, or undersea repeater use.
- The prior written approval of Mitsubishi Electric Corporation is necessary to reprint or reproduce in whole or in part these materials.
- If these products or technologies are subject to the Japanese export control restrictions, they must be exported under a license from the Japanese government and cannot be imported into a country other than the approved destination.